ICD200A

BLACK BOX NETWORK SERVICES

Industrial Opto-Isolated RS-232 to RS-422/485 Converter

Convert RS-232 data signals to RS-422/485 signals in heavy industrial areas.

Rugged IP30-rated metal case for panel mounting.

ICD200A
Quick Start Guide

Customer Support Information

Order toll-free in the U.S.: Call 877-877-BBOX (outside U.S. call 724-746-5500)
FREE technical support 24 hours a day, 7 days a week: Call 724-746-5500 or fax 724-746-0746 • Mailing address: Black Box Corporation, 1000 Park Drive, Lawrence, PA 15055-1018 • Web site: www.blackbox.com • E-mail: info@blackbox.com

1. What's Included:

- ICD200A Industrial Opto-Isolated RS-232 to RS-422/485 Converter
- This Quick Start Guide

User-Supplied Components

- 10- to 48-VDC power supply; this repeater draws a maximum of 2.3 watts.
- RS-232 cable. The converter is a DCE device.
- RS-422/485 cables. Recommended characteristics: 24 AWG twisted pair with a shunt capacitance of 16 pF per foot and 100-ohm characteristic impedance.

2. Certifications

- FCC Class A
- CE
- IEC 61850-3
- IEEE 1613

A detailed declaration of conformity is available at www.blackbox.com.

3. Front and Back Panels, DB9 Pin-out

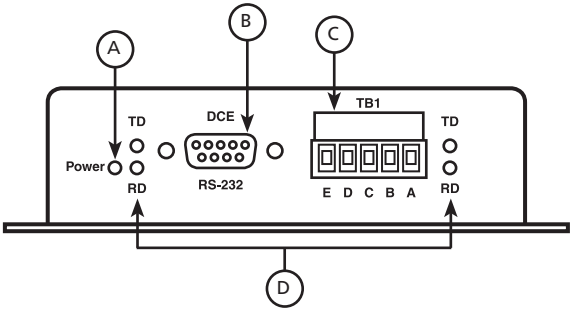

Figure 1. Front panel

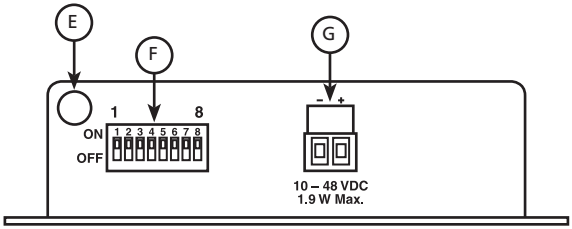

Figure 2. Back panel

Table 1: Front and Back Panels

A	Power LED	Red, “on“ when power applied
B	DB9 Female	RS-232 (Wired DCE)
C	422/485 Terminal Block	Five-position, removable; see **Section 7**
D	Data LEDs	Green LEDs flash when data is on port
E	Grounding Lug	Chassis ground to earth ground; see **Section 5**
F	DIP Switch	Used to configure the converter; see **Section 4**
G	Power Terminal block	Two-position, removable; see **Section 6**

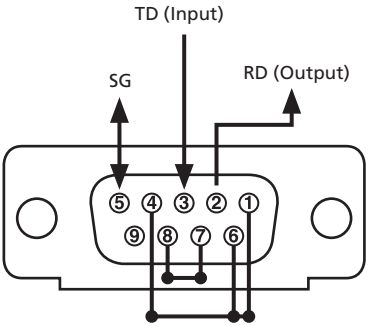

Table 2: DCE (Female)

Pin	Signal	Direction
1	DCD	–
2	RD	Output
3	TD	Input
4	DTR	–
5	GND	–
6	DSR	–
7	RTS	–
8	CTS	–
9	RI	–

Figure 3. DB9 pin-out. Pins 1, 6, and 4 are tied together internally; Pins 7 and 8 are tied together internally.

4. Configuration of DIP Switch

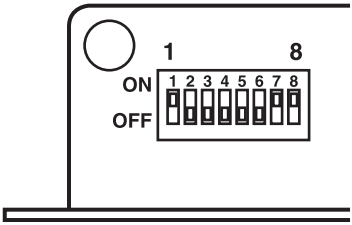

Figure 4. Switch position 8 is not used. Settings shown here indicate factory default.

Table 3: Communications Mode

	Switch			
	1	2	3	4
RS-485 2-Wire Half Duplex	On	On	On	On
RS-485 4-Wire Full Duplex	On	Off	Off	Off
RS-422 Full Duplex	Off	Off	Off	Off

Table 4: Built-in Termination Resistor	Switch 5
Use the 120-ohm built-in termination	On
Use external or no termination	Off

Table 5: Built-in Transmit Bias Resistor	Switch 6
Use the external or no bias resistor	On
Use the 1.2K ohm transmit bias resistor	Off

Table 6: Built-in Receive Bias Resistor	Switch 7
Use the external or no bias resistor	On
Use the 1.2K ohm receive bias resistor	Off

For an explanation of RS-485 termination and biasing requirements, refer to Black Box's white paper, "The Elements of an RS-422 and RS-485 System." This publication can be downloaded at www.blackbox.com > Resources > White Papers.

5. Ground Connection

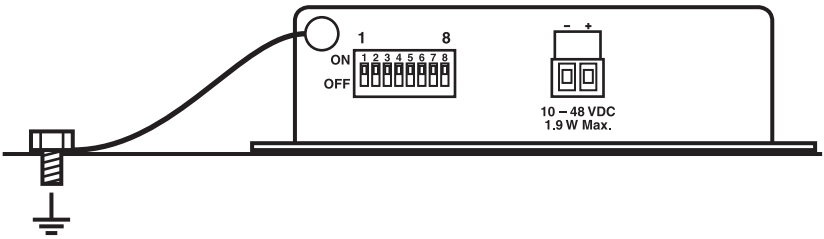

Figure 5. Black Box recommends that you ground the chassis as shown here.

Make sure that the chassis is grounded. Connect a grounding wire from the ground lug to a good grounding source.

6. Power Connection

1. Connect the power: Requirements are 10 to 48 VDC, 1.9 watt maximum.

2. The terminal block will accept 28 to 12 AWG wire.

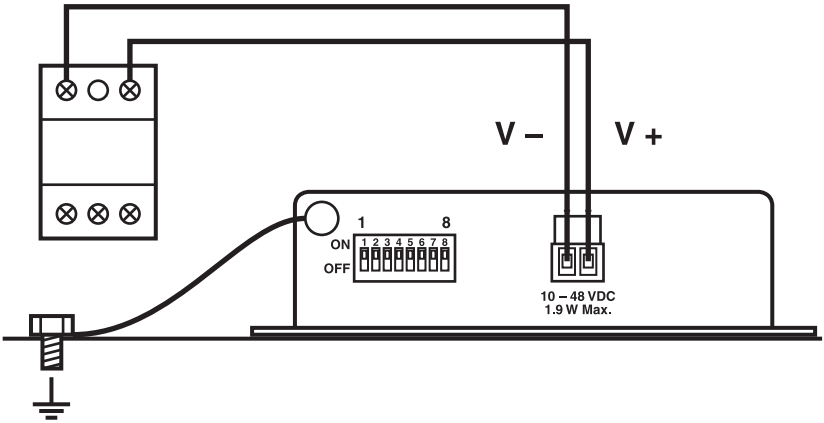

Figure 6. Power Connection

7. RS-422/485 Terminal Block

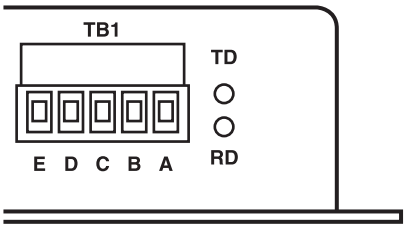

Table 7: Terminal Block Connections

Terminal	RS-422	RS-485
A	--	TDA (-)
B	--	TDB (+)
C	Data A(-)	RDA (1)
D	Data B(+)	RDB (+)
E	Ground	Ground

Figure 7. See cable recommendations in Section 1.

8. Wiring Examples

RS-485 2-Wire

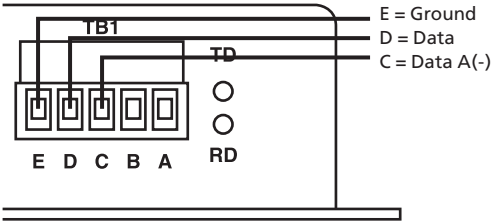

Figure 8. Terminal block for an RS-485 2-Wire connection.

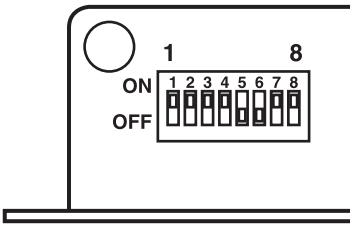

Figure 9. DIP switch settings for an RS-485 2-Wire connection. See Table 8.

Table 8: RS-485 2-Wire Dip Switch settings

1	2	3	4	5	6	7
On	On	On	On	X	X	On

Positions 5, 6, and 7 are used for termination and biasing. See Section 4.
Position 8 is not wired.

RS-422/RS-485 4-wire

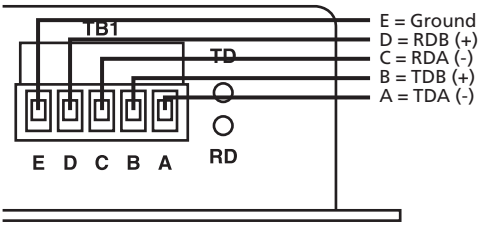

Figure 10. Terminal block for an RS-422/RS-485 4-wire connection-

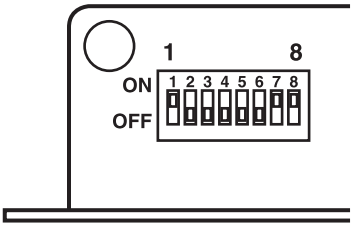

Figure 11. DIP Switch settings for an RS-422 4-wire connection. See Table 9.

Table 9: RS-485 4-Wire DIP Switch Settings

1	2	3	4	5	6	7
X	Off	Off	Off	X	X	X

Position 1 = ON for RS-485, OFF for RS-422. Positions 5, 6, and 7 are used for termination and biasing. See Section 4. Position 8 is not wired.

9. Loopback test / troubleshooting

Black Box recommends:

- Configure the converter for RS-485 4-wire.
- Jumper terminals A to C and B to D.
- Connect a PC to the RS-232 port (see Section 3). Use a DB9 female to DB9 male cable to connect a PC to the DCE port.
- Connect a DB9 female to DB9 female cable to the DTE port.
- Using hyperterminal or a similar program, connect to the appropriate COM port. Turn off hyperterminal local echo.
- Transmit the data. The same data that was transmitted should be returned. When data is sent and looped back, the TD and RD LEDs will blink on both ports.

Black Box Tech Support: FREE! Live. 24/7.

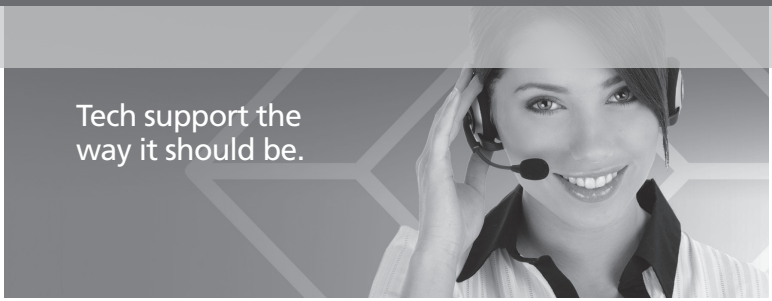

Great tech support is just 30 seconds away at
724-746-5500 or blackbox.com.

BLACK BOX®
NETWORK SERVICES

About Black Box

Black Box Network Services is your source for more than 118,000 networking and infrastructure products. You'll find everything from cabinets and racks and power and surge protection products to media converters and Ethernet switches all supported by free, live 24/7 Tech support available in 30 seconds or less.

© Copyright 2011. Black Box Corporation. All rights reserved.

ICD200A_QSG, rev. 1